1

System-level Constraints on Fuel Cell Materials and Electrocatalysts

Elliot Padgett and Dimitrios Papageorgopoulos

Hydrogen and Fuel Cell Technologies Office, Office of Energy Efficiency and Renewable Energy, U.S. Department of Energy, 1000 Independence Ave., SW, Washington, D.C., 20585, USA

1.1 Overview of Fuel Cell Applications and System Designs

Fuel cells are anticipated to play an important role in the future clean energy economy as versatile energy conversion devices across many applications and sectors. Fuel cells have important current and potential applications in three broad areas: (i) transportation powertrains, in vehicles such as cars, buses, trucks, rail locomotives, ships, and aircraft; (ii) stationary power systems, such as distributed power generation, backup power, and combined heat and power (CHP) systems; and (iii) specialty applications such as material handling equipment as well as portable systems for auxiliary power or devices such as personal electronics or mobile communications equipment. While fuel cells for these diverse applications have some common foundations, the systems for each application have different requirements and priorities, which call for different system designs and technologies to meet them. The development of advanced, application-relevant materials and electrocatalysts is essential to overcoming the technical challenges that remain to bring fuel cells into widespread adoption and realization of their potential. This chapter discusses how application requirements and system-level considerations create constraints on fuel cell materials and electrocatalysts, with the goal of informing more strategic and impactful research and development efforts. The primary focus will be on transportation applications and polymer electrolyte membrane (PEM) fuel cells, but other applications and fuel cell types will also be included for context and comparison.

1.1.1 System-level Fuel Cell Metrics

It is useful to begin by covering the typical high-level metrics for fuel cell systems, which provide a basis for comparing different fuel cell types, application requirements, and alternative technologies as well as for benchmarking technological

Electrocatalysis for Membrane Fuel Cells: Methods, Modeling, and Applications, First Edition.
Edited by Nicolas Alonso-Vante and Vito Di Noto.
© 2024 WILEY-VCH GmbH. Published 2024 by WILEY-VCH GmbH.

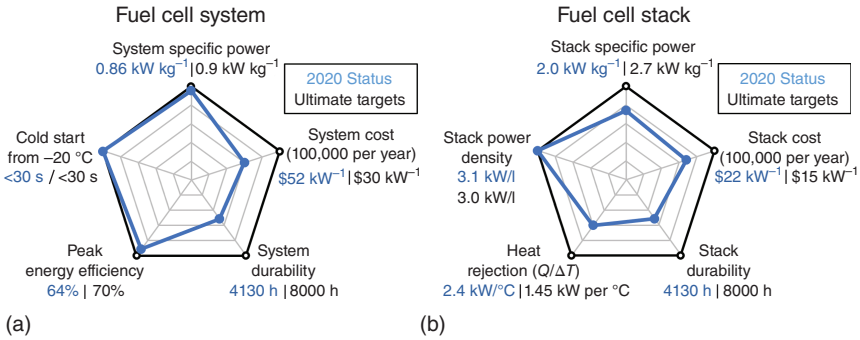

Figure 1.1 Diagrams summarizing the current status of automotive fuel cell systems (a) and stacks (b) relative to DOE targets. Source: Reproduced from U.S. Department of energy [4] / https://www.hydrogen.energy.gov/pdfs/20005-automotive-fuel-cell-targets-status.pdf / Public domain.

progress. These metrics are commonly used as specifications for fuel cell products and targets for fuel cell research, development, and demonstration (RD&D) programs [1–3]. For instance, system and stack-level targets for automotive fuel cells set by the U.S. Department of Energy (DOE), along with respective status estimates, are illustrated in Figure 1.1 [4]. The most used metric categories include cost, durability, efficiency, system size, and flexibility. Each of these, as well as specific metrics, will be described below.

There are several different metrics in common use that describe the size of fuel cell systems, combining the power output and physical mass or volume of the system. Power output may be given as gross power – the total electrical power output of the fuel cell stack – or as net power – the power output of the stack minus the power consumption of the supporting balance of plant (BOP). This distinction must be specified to avoid confusion and may be included in the power units (as kW_{gross} or kW_{net}, for example). To address application-driven system size and weight restrictions, the power output can be given as an absolute total, per unit weight of the system (this is known as the specific power, with units such as $kW\,kg^{-1}$), or per unit volume of the system (this is known as the power density, with units such as $kW\,l^{-1}$).

The energy conversion efficiency of a fuel cell system can be specified in either the electrical power output per fuel input (e.g. $kWh\ kg_{H_2}^{-1}$) or as a percentage of the fuel's lower heating value. Fuel cells generally are more efficient at low power than at high power, and the efficiency is closely tied to the fuel cell performance, as the same mechanisms of voltage loss decrease both. There are therefore different definitions for system efficiency specified at different performance levels, most commonly at the peak efficiency (at low power), peak or rated power, or an average efficiency over a particular duty cycle.

Fuel cell durability or lifetime is commonly specified as the number of hours of operation before a certain level of degradation is reached. While, in practice, the tolerable level of degradation will vary depending on the user's needs, it is also useful to use standardized end of life definitions such as 10% voltage degradation at rated power for benchmarking purposes. It is also important to recognize that degradation

rates and lifetimes for fuel cell systems will depend on the duty cycle and stressors of each application.

The cost of a fuel cell system is an important metric but is more challenging to determine than other metrics that are rooted in the physical or engineering parameters of the system. The actual cost of deployed fuel cell systems is of interest in business transactions and to assess current market competitiveness. The projected cost of fuel cell systems using earlier stage, lab-demonstrated technologies, and larger manufacturing scales is also useful for tracking advances in technology and informing research and development (R&D) needs. The cost of fuel cell systems is commonly specified per power output (e.g. $\$\ kW_{net}^{-1}$) although this metric depends on both the system size and the definition of the system boundaries (fuel storage, power electronics, and other components are commonly excluded from the fuel cell system, although system definitions vary).

Flexibility and robustness are umbrella concepts that encompass many different potential metrics for the ability of the fuel cell system to adjust to provide power as it is required. These include the time required to start the fuel cell system, its capability to start and sustain power under cold or hot conditions, its ability to quickly adjust to varying power demands, and the reliability of the system.

It is important to recognize that the various aspects of fuel cell systems that are described by these metrics are interrelated. For instance, an alteration to a fuel cell system that lowers its cost may also impact its power output, efficiency, and durability. Composite metrics that constrain related metrics in a particular way can therefore also be useful. For example, DOE has introduced a "durability-adjusted cost" metric for automotive fuel cells, which describes the cost of an 80-kW_{net} fuel cell system that also meets the requirements for 8000 hour on-road durability [5].

1.1.2 Fuel Cell Subsystems and Balance of Plant (BOP) Components

Fuel cells require supporting BOP equipment to provide high performance and durability, including the supply of air and fuel, cooling, and system monitoring and control. It is important to understand the common subsystems and components used for these purposes. State-of-the-art fuel cell system designs are generally proprietary, but representative model systems have been developed to provide public information. For instance, the DOE has funded the development of a model automotive fuel cell system in a collaboration between Strategic Analysis, Inc. and Argonne National Laboratory and with feedback from the U.S. DRIVE (Driving Research and Innovation in Vehicle efficiency and Energy sustainability) Partnership [6, 7]. This model system is a useful resource for understanding the subsystems and components in transportation fuel cell systems. Similar model systems are being developed for medium- and heavy-duty vehicles [8–10] and have also been developed for stationary and other fuel cell types [11–14].

Example diagrams of fuel cell systems for automotive and heavy-duty vehicle applications are shown in Figure 1.2. These diagrams provide a representative illustration of typical BOP components and subsystems in transportation fuel cell systems.

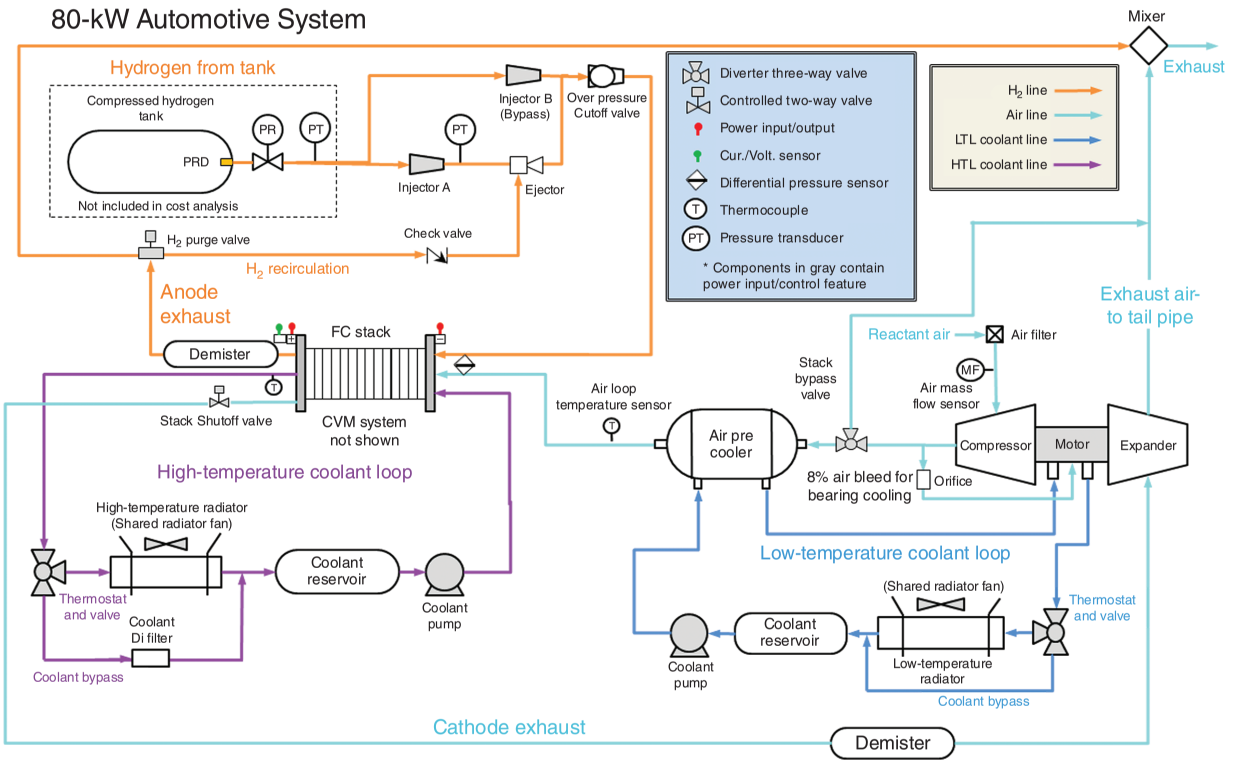

Figure 1.2 Schematics of representative fuel cell system designs for automotive (top) and heavy-duty vehicle (HDV) applications (bottom) illustrating major balance of plant components and subsystems. Source: Reproduced from Ref. [6].

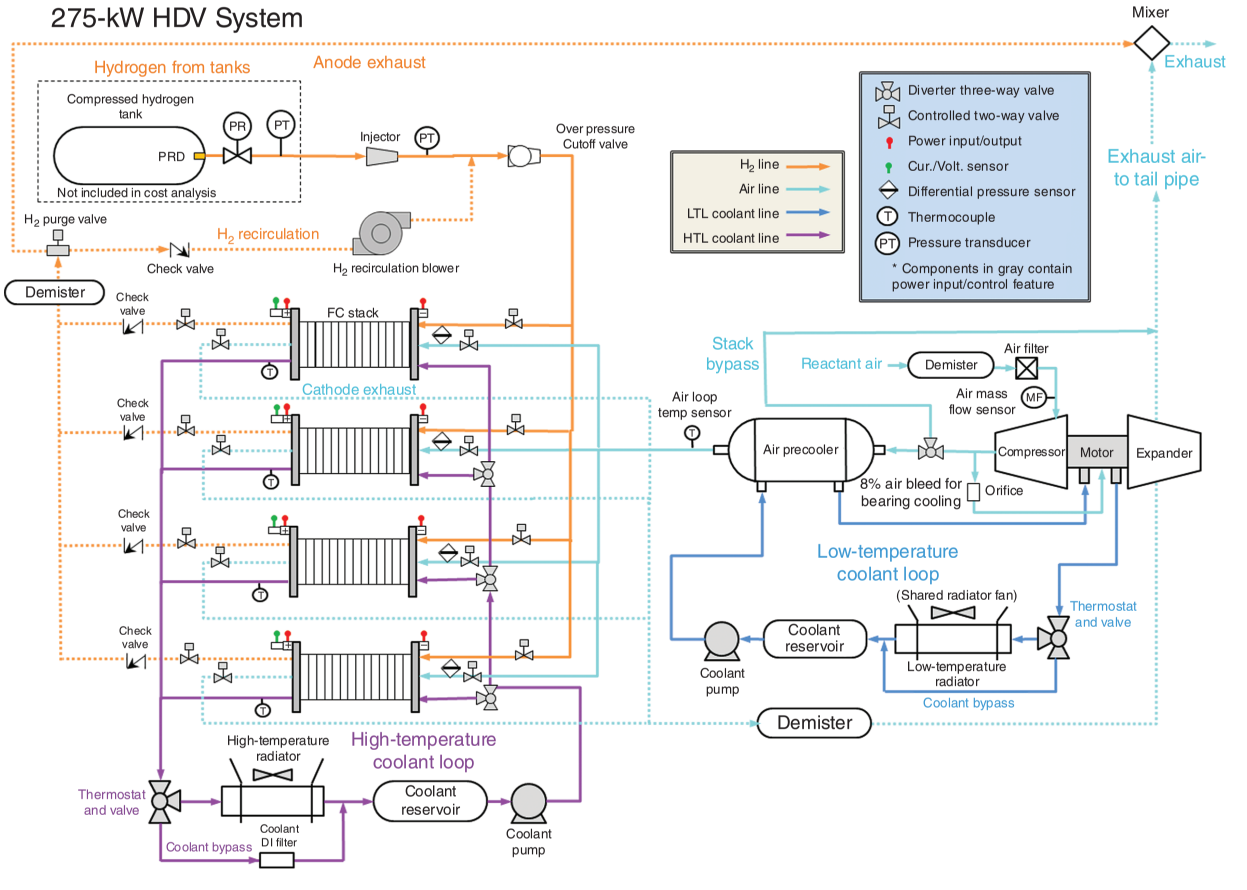

Figure 1.2 (*Continued*)

As the power-producing component, the stack is the heart of the fuel cell system. The stack is a collection of individual galvanic cells, each of which provides <1 V when operating, connected in series to create a power device that provides a higher, more useful voltage. In some applications, multiple stacks may be used together for modular, higher power systems. Each cell contains a membrane electrode assembly (MEA), which is the electrochemically active stack component, with diffusion media (gas diffusion layers and microporous layers) on each electrode encouraging uniform distribution of reactants over the MEA and removal of water. MEAs are connected in the stack by electrically conductive bipolar plates to collect the electric current produced, which include flow channels facing the MEAs to deliver reactants to the electrodes. Bipolar plate assemblies also include coolant channels running between (and separated from) the MEAs to remove waste heat from the stack. Gas manifolds distribute gases between the cells in the stack, and gaskets are included to seal gas within the desired electrodes. The stack also includes structural components, including tie rods that hold the cells together and housing that encloses the stack.

Fuel must be supplied and prepared for the fuel cell system, requiring different BOP components depending on the type of fuel. If hydrogen is the fuel, the preparation required is minimal: the pressure and flow rate of hydrogen to the stack must be controlled, and in some cases the hydrogen may be humidified. Unused hydrogen may also be recirculated. More complex molecules, such as alcohols or hydrocarbons, may also be used as fuel for different types of fuel cell systems. High-temperature fuel cells (e.g. solid oxide) can use complex fuels directly, reforming them internally in the stack. Low-temperature fuel cells may include an external reformer, which produces hydrogen from the fuel and must also remove by-products, such as carbon monoxide, that are harmful to the fuel cell.

Fuel cell systems also require air to be supplied to the fuel cell stack. To enable high-power performance, the air is typically pressurized by a compressor, which may be a simple compressor or a compressor-expander module, which recoups some energy from the pressurized outlet stream to improve overall efficiency. Compression heats the air supply, so precooling may be necessary before the air enters the stack. The air supply may also be humidified to ensure optimal performance of membrane and electrodes, and air must be filtered to remove potentially harmful contaminants.

The thermal management subsystem removes waste heat from the fuel cell system, using coolant to transfer heat from the stack (and other BOP components, such as the compressor, as needed) to the radiator. Thermal management subsystems typically consist of pumps, coolant lines, and radiators, although the radiator is sometimes considered to be external to the fuel cell system. Multiple thermal management subsystems may be used, such as a high-temperature loop for the fuel cell stack and a low-temperature loop for the air processing subsystem.

The fuel cell system also includes components used to monitor and control the system. Numerous sensors are used in fuel cell systems, including stack voltage and current monitors, pressure and temperature sensors at different points in the system, and hydrogen sensors to detect leaks. These sensors provide information to the system controller, which directs the system to deliver requested power, while maintaining safe operation and avoiding conditions that may degrade the fuel cell.

Several other systems and components commonly accompany the fuel cell system, but are not considered a part of it, such as the fuel storage system, power electronics, and hybrid batteries. The boundaries between the fuel cell system and these other systems necessary for applications are often not defined consistently. However, these external systems have minimal impact on the choice of fuel cell materials and so will not be covered in this chapter.

1.1.3 Comparison of Fuel Cell Systems for Different Applications

The design of fuel cell systems and the technologies used vary significantly between different applications. For transportation fuel cell systems, flexibility and fast startup are critical, making PEM fuel cells the preferred technology. For automotive applications, the fuel cell system is typically sized to provide around 100 kW rated power and is usually accompanied by a hybrid energy storage battery to support transient and peak power demands. Larger fuel cell systems (hundreds of kW to several MW) with multiple stacks are used for heavy-duty vehicles, while smaller (up to tens of kW) but similar systems are used for material handling vehicles such as forklifts. Transportation fuel cell systems are typically direct hydrogen fueled, making the fuel supply subsystem relatively simple. The compressed air supply and heat rejection are both very important to enable high power density and specific power. A low cost is important for the fuel cell system to compete with incumbent combustion engine technologies. Durability is also a key concern for transportation fuel cells, as powertrains are required to endure thousands of hours of operation for automobiles and tens of thousands of hours for heavy-duty vehicles. The relative importance of different system metrics varies significantly between different transportation applications as well. For example, automotive fuel cell developers prioritize lowering capital cost and improving high-power performance to enable system size and cost reductions. In contrast, full lifecycle costs are important for commercial, heavy-duty vehicles, making durability and efficiency important priorities. Furthermore, for heavy-duty vehicle applications that carry heavy loads, the fuel cell system needs to be designed to deliver high power for more sustained periods, which can create more harsh conditions for fuel cell materials.

Stationary fuel cell systems vary widely in scale from <1 kW "micro-CHP" residential systems to large multimegawatt systems. For backup power systems, flexibility and responsiveness are critical, so PEM fuel cells are typically used. Because backup power systems operate only a small fraction of the time, capital cost dominates their overall cost. For distributed power and CHP applications, systems are typically operated continuously for very long periods, making durability and efficiency very important. The fuel processing system is also important for stationary fuel cell systems fueled by methane (natural gas or biogas). Stationary fuel cells have minimal constraints on the system size or weight.

For specialty applications such as material handling, fuel cells must provide at least equivalent performance without significant changes in functionality, size, and counterbalance weight compared to the incumbent technology. They must provide short bursts (15–20 seconds) of high power for lifting a heavy load, plus

sustained power to drive the equipment. On the other hand, portable fuel cell systems typically have low power requirements. However, they are subject to extreme system size and weight limitations, and often are designed to minimize the required BOP, for example by operating at or near ambient pressure. Because these constraints impact the fuel storage system as well, liquid fuels are of interest for these applications. Cost may or may not be a serious constraint depending on the application; for consumer electronics, low costs are required to compete with Li-ion batteries, which have seen rapidly falling prices in recent years. However, for military or other specialty applications high costs may be acceptable.

1.2 Application-derived Requirements and Constraints

This section covers constraints on fuel cell operation and material choices that are imposed by the system and application requirements. Fuel cell materials must meet all system-level requirements simultaneously, which makes some otherwise promising materials infeasible. The most fundamental requirement of a fuel cell system is to provide the power demanded by the application. This requirement includes two broad categories: (i) maximum power performance, either instantaneous or sustained, and (ii) flexibility to deliver power under a variety of conditions and in response to changing demand. The fuel cell system, components, and materials must also be durable to provide the required performance not only initially but also after extensive use and exposure to potentially damaging conditions. Finally, fuel cell systems must be available at low cost to be competitive with alternative power systems, considering both initial capital and operating costs. It is important to note that performance, durability, and cost are interrelated, which allows for trade-offs between the three, depending on the lifecycle requirements of the application.

1.2.1 Fuel Cell Performance and the Heat Rejection Constraint

Cell-level performance is a fundamental issue underlying the system-level power density, specific power, cost, and efficiency. The fuel cell system must be sized to deliver the power required depending on the nature of the application and the system architecture. For a fuel-cell-dominant hybridization scheme, the fuel cell must deliver the required sustained maximum power, as the relatively small battery can add to the peak power for a limited period of time. For a battery-dominant hybridization scheme, the fuel cell instead must deliver the average power required, with the battery supplying power for peak demand. For example, fuel-cell-dominant automotive fuel cells operate most of the time at low-power conditions, where the system is most efficient, but occasionally require a high rated power (such as for highway merging). This makes rated power important because it drives system size requirements and is directly related to cost.

The voltage loss mechanisms that determine fuel cell performance, illustrated in Figure 1.3a, have been thoroughly described in many other texts on fuel cells and electrochemistry [15, 16], so we will only briefly recap them here. The ideal potential

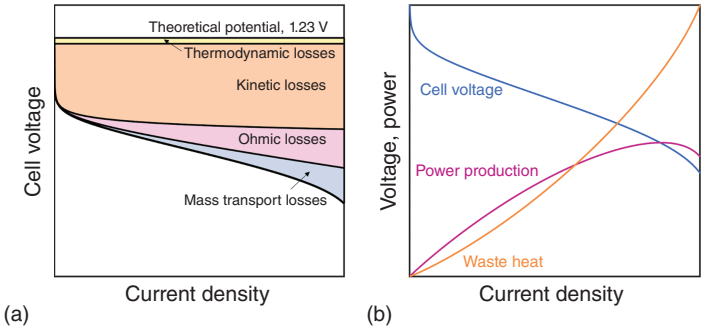

Figure 1.3 Illustrations of (a) the voltage loss mechanisms that contribute to the fuel cell polarization curve and (b) the relationship among the fuel cell voltage, electrical power production, and waste heat that must be rejected.

(for a perfectly reversible process) is determined by the overall thermodynamics of the fuel cell reaction, corresponding to 1.23 V for a hydrogen-oxygen fuel cell at standard ambient temperature and pressure [15]. Nonstandard thermodynamic conditions modify this potential as described by the Nernst equation, but the correction is generally small (on the order of 10 mV) for PEM fuel cells. The actual voltage of an operating fuel cell depends on the current density and is determined by voltage losses from reaction kinetics, Ohmic resistance, and mass transport.

The largest loss for low-temperature fuel cells under typical conditions is due to the slow kinetics of the oxygen reduction reaction (ORR) on the cathode. ORR kinetics for PEM fuel cells are well described by the Tafel approximation [17] and have a roughly logarithmic dependence on the current density, growing rapidly at low current density and then varying slowly at moderate to high current densities. ORR kinetic losses are impacted by the intrinsic activity of a catalyst material, the active surface area in the fuel cell electrode, and interactions with the polymer electrolyte in the electrode (the ionomer), which may coat the active surface. By contrast, the kinetics of the hydrogen oxidation reaction (HOR) at the fuel cell anode are extremely rapid, and HOR kinetic losses for PEM fuel cells are typically negligible, even with extremely low catalyst loadings. For high-temperature fuel cells kinetic challenges are minimal.

Ohmic losses increase linearly with current density in proportion to the overall resistance of the cell. In PEM fuel cells the membrane is typically the primary source of ohmic resistance, with the electrode ionomer also contributing significantly under some conditions. The carbon-based materials commonly used for gas diffusion media and catalyst supports contribute minimal resistance, although contact resistances and less-conductive, corrosion-resistant alternative materials may contribute significant ohmic losses. For high-temperature, solid oxide fuel cells, the ohmic resistance of the ceramic electrolyte typically dominates overall losses.

Mass transport-related losses are negligible at low current density but grow rapidly at high current density. The primary source of transport losses for hydrogen-air fuel cells is oxygen diffusion in the cathode. This includes both bulk oxygen transport through the electrode and local oxygen transport resistance associated with oxygen

diffusion to a limited number of catalytically active sites, which is a particularly important and challenging problem for low-platinum group metal (PGM)-loaded electrodes [18]. Inadequate removal of product water can also lead to condensation or "flooding," leading to significant mass transport losses. The effectiveness of mass transport is determined by the porous structure of the diffusion media and electrodes, including the catalyst support structure and ionomer dispersion.

Beyond simple single-cell performance, heat rejection puts an important constraint on performance. As illustrated in Figure 1.3b, as the voltage losses increase at higher current densities, the efficiency of energy conversion in the fuel cell declines. Consequently, the increase in power output slows, eventually reaching a peak at high current density and high voltage loss. This also leads to an accelerating growth in the amount of waste heat produced by the fuel cell.

During steady-state operation, the fuel cell system must remove all waste heat produced by the fuel cells stack. For brief periods, the stack can be allowed to generate excessive heat if it is at a relatively low temperature, so higher power is possible in transient operation than the continuous power rating. The heat Q rejected from radiator can be simply described by Newton's law of cooling:

$$Q = hA\Delta T \tag{1.1}$$

where h is the heat transfer coefficient, A is surface area, and $\Delta T = T_c - T_a$ is the difference between the coolant temperature T_c and the ambient temperature T_a. For a given radiator, h and A are fixed, so $Q/\Delta T$ must stay below a certain value. This makes a particular value of $Q/\Delta T$ a metric to describe radiator capacity, which is limited for vehicle applications. To meet this heat rejection constraint, it is possible to either lower the amount of waste heat produced or raise the operating temperature. This sets a practical limit on the feasible fuel cell operating conditions [19].

A simple formula relates the $Q/\Delta T$ heat rejection metric to rated (continuous) power operating conditions, particularly the cell voltage V_r, which determines the fraction of energy converted to waste heat, and the stack coolant outlet temperature T_c, which determines how effectively that heat can be rejected through the radiator:

$$\frac{Q}{\Delta T} = \frac{P_g(V_i - V_r)/V_r}{T_c - T_a} \tag{1.2}$$

where P_g is the gross power rating of the stack, and V_i is the ideal cell voltage. This relationship is illustrated in Figure 1.4, which shows the dependence of the cell voltage at rated power V_r on T_c and $Q/\Delta T$, using standard assumptions [20] for an automotive fuel cell system (90 kW_{gross} rated power, 40 °C ambient temperature, and 1.23 V ideal cell voltage). In general, lower voltages (and therefore higher current and power densities) can be used with either a higher coolant temperature or higher $Q/\Delta T$ (i.e. radiator size). The DOE has set a target for fuel cell heat rejection of $Q/\Delta T \leq 1.45$ kW per °C to enable use of practically sized automotive radiators for fuel cell vehicles.

Meeting this automotive heat rejection constraint creates a strong motivation for using higher temperature (e.g. 94 °C) and higher pressure (e.g. 2.5 bar) operating conditions at rated power [19]. Raising the temperature allows higher current

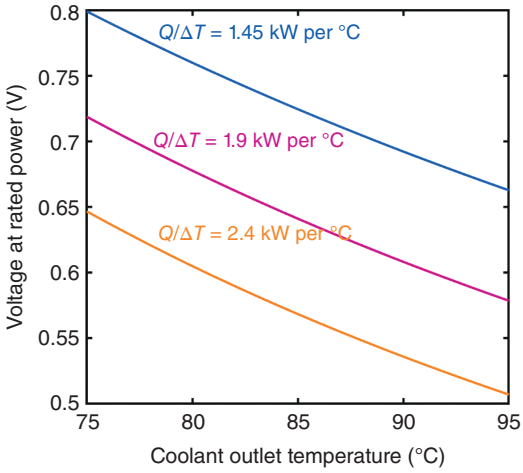

Figure 1.4 Plot of the relationship imposed by the heat rejection constraint among cell voltage at rated power, coolant outlet temperature, and the $Q/\Delta T$ metric.

(and power) density by relaxing the voltage limitation imposed by heat rejection, for example from 0.76 V at 80 °C to 0.67 V at 94 °C. Raising the operating pressure also enables higher power density by improving kinetics and mass transport, although this performance boost must be balanced against higher parasitic power losses from air compression.

The heat rejection constraint also translates into constraints on the set of viable fuel cell materials. For heat-rejection-constrained fuel cell applications such as transportation, high-power performance beyond the heat rejection limit is not useful, and the cell cannot be operated at the "maximum" point of the power curve shown in Figure 1.3b. This reinforces the importance of high-activity catalyst materials; if catalyst's onset potential is too low, the cell voltage will be low at any practical current density, and it will be infeasible to meet the heat rejection constraint. Materials must also be selected to minimize ohmic and mass transport losses to extend high-power performance near the rated-power voltage limit. The heat rejection constraint also creates a motivation to develop materials, especially membranes and ionomers, that provide adequate performance and durability at higher operating temperatures. It may come as a surprise that fuel cell voltages near 0.6 V (roughly 50% efficient) may be impractical for heat rejection reasons, given that this efficiency greatly exceeds that of internal combustion engines. However, the lower operating temperature of PEM fuel cells and lack of significant heat removal in the exhaust stream make heat rejection somewhat more challenging in comparison to combustion engines [10].

1.2.2 Startup, Flexibility, and Robustness

In addition to meeting the maximum power requirements of each application, the fuel cell system must deliver the appropriate level of power when needed under all relevant conditions. This is not a significant constraint for some applications, such as distributed power generation or CHP systems, which may always run at essentially constant power. However, it is a critical requirement for many transportation

systems, which must be able to start up quickly and adapt to variations across their duty cycles.

Transportation fuel cells generally must start up from significantly lower ambient temperature than standard operation (around 80 °C), including possibly very low temperatures (e.g. −40 °C) for compatibility with cold climates. The fuel cell system must provide adequate power within a short time from startup, and while some amount of energy goes to heating the stack to operating temperatures, excessive energy consumption during startup must be avoided. As will be discussed below, startup and shutdown can also create conditions, such as fuel starvation, that may degrade the fuel cell materials and therefore must be managed [21, 22]. While system startup is largely a matter of system design and engineering, it also has some important implications for viable fuel cell materials. For instance, higher operating temperatures would be useful to improve performance and heat rejection issues as discussed above, but challenges with startup from low temperatures (e.g. poor ionic conductivity) prevent the use of many intermediate and high-temperature materials for transportation applications.

The requirement for flexible and robust operation also imposes some constraints on fuel cell materials, especially related to water management. Rapid water production at high current densities, especially at relatively low temperatures, can lead to electrode flooding and performance losses. To address this issue, the porosity, thickness, and hydrophobicity of fuel cells must be engineered, and ideally materials for catalysts, catalyst supports, and diffusion media can be designed to enable water rejection without flooding. Conversely, dry conditions can also pose a challenge for performance, as low humidity can lead to performance losses from decreased conductivity of polymer membranes and ionomers as well as decreased catalyst utilization. Dry conditions can be avoided to some extent by humidification of the inlet gas streams, or by design of the stack to enable self-humidification of the cells, but performance loss under dry conditions is an important limitation on the feasible upper temperature for PEM fuel cells, as significant humidification becomes impractical at temperatures approaching the boiling point of water. Ultimately, materials development to improve tolerance to a variety of operating conditions has an important role in enabling the flexibility of fuel cell systems.

1.2.3 Fuel Cell Durability

The conditions inside a fuel cell are intrinsically degrading to materials. The strongly acidic electrolyte and oxidizing potentials lead to both chemical and electrochemical stresses. Furthermore, changes in temperature and humidity within the cell lead to swelling of the membrane and mechanical stress on the MEA. Materials degradation caused by these stresses leads to degraded performance over time and in some cases catastrophic failure of the fuel cell. The catalysts, membrane, and bipolar plates are all at risk for serious degradation, making durability a key concern for their materials. The various degradation mechanisms of fuel cell materials have been discussed extensively in the research literature [23] and remain a topic of ongoing interest. The major degradation mechanisms will only be briefly summarized here.

Metal-based fuel cell catalysts suffer from dissolution, especially at high electrode potentials and during voltage cycling. Noble metals, such as platinum, are generally redeposited somewhere in the cell, leading either to catalyst mass loss if the redeposition occurs in the membrane or to catalyst coarsening if the redeposition occurs in the electrode, since the Ostwald ripening mechanism tends to favor migration from smaller particles to larger ones. Both catalyst mass loss and coarsening lead to loss of the active catalyst surface area. Less noble metals, such as cobalt and nickel, tend to remain ion-exchanged into the membrane or ionomer when dissolved, poisoning its ionic conductivity. Catalyst coarsening can also occur through migration and coalescence of catalyst nanoparticles. The catalyst support can also suffer from degradation, especially for carbon materials when the cathode approaches open-circuit voltage or when the anode experiences high potentials due to cell reversal [21]. These circumstances do not generally occur during normal operation of the fuel cell but may occur during uncontrolled startup or shutdown, or due to fuel starvation [24].

Fuel cell membranes experience oxidative chemical damage caused by free radicals generated at high electrode potentials, which leads to thinning of the membrane and eventually pinhole formation. This degradation mechanism can be dramatically accelerated by contaminant cations such as iron or copper that catalyze Fenton reactions, decomposing hydrogen peroxide generated in the ORR into free radicals. Because Fenton catalyst cations are a risk factor for membrane degradation, dissolution of these metals from other components, such as stainless-steel bipolar plates or catalyst materials, must be carefully avoided. Membrane degradation can also be caused by mechanical stresses, especially due to swelling from humidity cycling in the cell, or from imperfections in the electrodes such as bumps. State-of-the-art fuel cell membranes typically contain a reinforcement layer, making them more resilient to mechanical stresses.

Bipolar plates may degrade through dissolution of their base metals, especially for stainless steel plates, which can lead to membrane degradation as noted above. Bipolar plates can also form passivating surface layers that can increase contact resistance and lead to performance losses. Metallic bipolar plates therefore require coatings, commonly using precious metals, to ensure corrosion resistance and conductivity.

Fuel cell systems are generally designed to mitigate materials degradation by controlling the operating conditions to especially avoid degrading conditions. System mitigation strategies commonly include limiting time spent at high temperatures, restricting the voltage window to avoid high potentials when idling or at low power, and controlling the startup and shutdown procedures to avoid exposing the electrodes to high potentials. Sensors, for example cell voltage monitors and temperature or humidity sensors, are typically part of integrated diagnostics to actively track the current degradation state of the fuel cell system. Furthermore, prognostic algorithms can be implemented and integrated for advanced control and projection of fuel cell remaining lifetime during operation [25]. System mitigation strategies often involve some degree of compromise for fuel cell performance or flexibility. For instance, limiting the operating temperature leads to less-effective heat rejection and lower rated power. Limiting the maximum operating voltage limits the range of output power and maximum possible efficiency. However, extensive monitoring and controls add

to the system complexity and cost. As such, it is preferrable to achieve as much durability as possible with material solutions to limit reliance on system mitigation.

Fuel cell applications generally require adequate performance to be maintained over long periods of time. For example, the DOE has set ultimate targets for fuel cell system lifetime at 8000 hours for light-duty vehicles, 30 000 hours for heavy-duty trucks, and 80 000 hours for large (100 kW to 3 MW) stationary power systems [1, 26]. Materials and components must be stress tested in advance to ensure that they are durable enough for these applications. Because it is impractical to run routine testing as long as the application lifetime, accelerated stress tests (ASTs) are necessary for R&D purposes. ASTs, such as those recommended by the DOE [1], generally are designed following one of two broad approaches. The first of these is to attempt to represent the conditions created by real duty cycles for a particular application. This approach can provide a relatively direct demonstration of a material or component's fitness for that application. However, because fuel cell systems generally incorporate mitigation strategies to avoid degrading conditions, a drawback of this approach is that it is difficult to both represent a realistic system including mitigation and also give adequate acceleration for practical testing. The second approach is to target a particular degradation mechanism. This approach enables highly accelerated testing by focusing on deliberately degrading conditions, while also providing scientific clarity by selecting a single mechanism. However, mechanism-targeted ASTs can neglect potentially interacting degradation mechanisms, which may require separate, combined ASTs to capture. Also, it is not straightforward to translate from mechanism-targeted AST results to expected lifetime. Modeling that includes the scientific basis of degradation can have a useful role in projecting lifetime from AST results and exploring mitigation strategies [27].

1.2.4 Cost

While cost constraints are unlike the constraints described above, which have a physical or chemical basis, the need for competitive fuel cell system cost puts important limitations on feasible materials. The important cost factors for fuel cell systems include intrinsic material costs and manufacturing costs, which contribute to up-front capital costs, as well as ongoing operating costs.

Similar to fuel cell system designs, information on manufacturing costs for real fuel cell systems and components is generally proprietary. However, useful guidance can be derived from publicly reported cost estimates based on bottom-up analysis, input from industry experts, or a combination of these. For instance, James et al. [6] have performed extensive cost analysis based on the model automotive fuel cell system discussed above using industry input to inform manufacturing assumptions. This analysis projected the cost of fuel cell systems and components at different manufacturing scales, as illustrated in Figure 1.5, assuming the use of state-of-the-art technology currently demonstrated at laboratory scale that is expected to be employed for future, high-volume manufacturing. This approach is necessarily more speculative than assuming "on-road" technology that is currently commercially available, which lags laboratory-scale technology by several

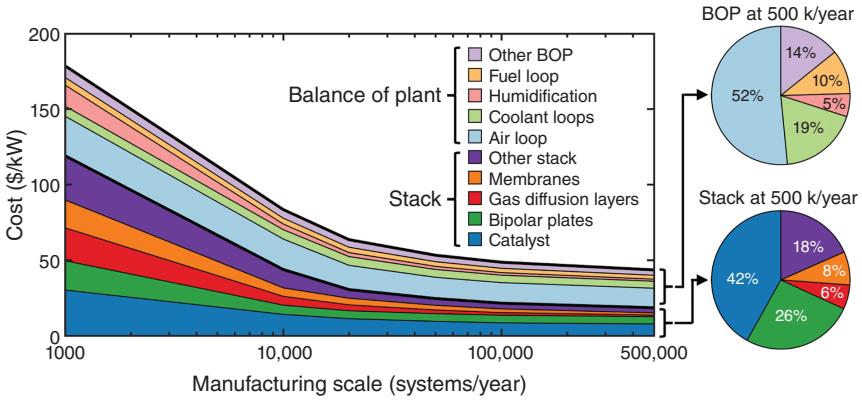

Figure 1.5 Breakdown of fuel cell system cost by major stack and balance of plant (BOP) components and subsystems, projected to different manufacturing scales. Pie charts at right show the fraction of stack and BOP costs due to different components at 500 000 systems per year manufacturing scale. Source: Adapted from Ref. [6].

years, but it is most useful for identifying high-impact research and development opportunities. Similar cost analysis is also available for other fuel cell types, such as stationary fuel cells [11–14, 28].

Manufacturing costs generally decline with manufacturing scale for specialized BOP and fuel cell stack components. Overall, Figure 1.5 shows that increasing manufacturing volume from current levels (thousands of systems per year) to high volume (hundreds of thousands of systems per year) is expected to decrease fuel cell system costs by roughly two-thirds even without any advances in technology. However, not all costs can be decreased simply by manufacturing scale-up. Some components, such as the cooling subsystem components, are already manufactured at high volume and available off-the-shelf and are therefore not expected to see significant cost reductions as fuel cell systems are manufactured at higher scale. Furthermore, fuel cell stack components commonly use several intrinsically expensive materials, which set a limit on the cost reductions that can be achieved through high-volume manufacturing. The most notable examples are platinum-group-metal (PGM) catalysts, which provide the highest performance and durability among currently available catalyst materials, and bipolar plates containing titanium, 316 stainless steel, and PGM coatings for improved corrosion resistance and conductivity. Together, catalysts and bipolar plates account for most of the cost of fuel cell stacks at high manufacturing volume according to the analysis illustrated in Figure 1.5. Consequently, reducing the number of costly materials required for high-performance fuel cell stacks and the development of low-cost alternative materials are key research priorities.

Even without expensive feedstock materials, viable materials and components must be manufacturable without adding significant expense. Thus, they must be designed with scalability in mind. For instance, membranes are expected to be a significant contributor to fuel cell stack costs even at high volume manufacturing because the fluoropolymer chemistry required to synthesize conventional polymer electrolyte membranes is challenging and expensive. In general, materials that

involve synthesis or processing that includes many steps, challenging processes, or procedures that cannot be translated from small batches to large-scale production may add prohibitively large costs for fuel cell applications. Furthermore, manufacturing that includes steps that are hazardous or potentially environmentally harmful is problematic for implementation at scale. Therefore, it should be avoided if possible. The cost and environmental impact of fuel cell materials and components can also be mitigated somewhat through recycling or reuse. Selection of materials and design of manufacturing processes to enable recyclability or reuse are therefore of interest.

Beyond up-front cost impacts, fuel cell materials and system designs can also impact the ongoing operating costs for the system. For some applications, such as medium- and heavy-duty commercial vehicles or distributed power generation, lifetime fuel costs can be significantly greater than up-front capital costs [26]. In these applications, the efficiency of the fuel cell system therefore plays an important role in overall lifetime costs, making it advantageous to use more expensive materials or components that improve efficiency, such as higher catalyst loadings, high-activity catalysts, or BOP components with reduced parasitic power requirements.

1.3 Material Pathways to Improved Fuel Cells

Understanding of application-driven constraints provides necessary guidance for efforts to research and develop advanced fuel cell materials and electrocatalysts. All major constraints and requirements must be met simultaneously by a viable fuel cell system. As such, these requirements can rule out the viability of some materials, while making other advancements highly impactful for the technology. Further improvements to oxygen reduction catalysts have a very important role to play in advancing fuel cell technologies.

Catalyst advancements have significant potential to improve fuel cell performance. ORR kinetics generally remain the largest source of voltage loss for PEM fuel cells, and local transport issues with cost-effective, low-PGM loadings make catalyst design a key factor in high-power performance as well. Improving the intrinsic activity of the catalytically active surface is important, but also interactions among the catalyst, support, and ionomer in the operational MEA environment are essential to realizing high performance in real fuel cell applications.

Catalysts are also currently the single largest contributor to fuel cell stack cost, and catalyst improvements are necessary to bring down fuel cell cost to achieve widespread use and high-volume manufacturing. Two general pathways are available for significant cost reductions. The first of these is to improve the performance of Pt-based catalysts in low-PGM fuel cells. Performance improvements both allow the PGM loading to be reduced, and the overall stack size to be reduced, enabling reduction in all other stack costs. The second pathway is the development of low-cost, alternative PGM-free catalysts, such as iron-nitrogen-carbon-based materials [29]. If these catalysts advance to the point of reaching near-parity with low-PGM catalysts on performance and durability, they can replace PGM-based catalysts to enable a large cost reduction and avoidance of materials scarcity issues.

Catalyst durability is a primary factor limiting fuel cell lifetime. The necessary, cost-motivated use of low-PGM loadings leaves little margin of error for catalyst degradation, making good catalyst durability a necessity. Furthermore, increasing interest in heavy-duty applications that demand exceptionally long lifetimes makes fuel cell durability a top R&D priority. These applications also have rigorous demands for performance and efficiency, which make aggressive system mitigation strategies (e.g. strong voltage clipping or temperature limitations) undesirable. Advances in the durability of high-performance catalysts and other fuel cell materials will be essential for fuel cell success in these applications.

Beyond hydrogen-fueled PEM fuel cells, there are several long-term, transformational pathways for fuel cell advancement, including alkaline membrane, intermediate temperature, direct liquid, and reversible fuel cell technologies. These technologies are at an early stage of R&D but have the potential to dramatically improve the competitiveness of fuel cell technologies across applications by expanding the capabilities of fuel cells and lowering their cost and dependence on rare materials such as platinum. Alkaline membrane fuel cells present the opportunity to combine the high power density of PEM fuel cells with alkaline conditions that offer possible compatibility with less-expensive materials. Intermediate temperature fuel cells, which operate in the 200–500 °C temperature range above the operating temperatures of PEM and phosphoric acid fuel cells but below those of solid oxide and molten carbonate fuel cells, offer the potential advantages of high efficiency, low-cost materials, fuel flexibility, and effective heat rejection. Direct liquid fuel cells, which consume fuels such as methanol, ethanol, or dimethyl ether in low-temperature cells, could address significant challenges with hydrogen fuel storage and infrastructure. Reversible fuel cells, which can operate in either fuel cell or electrolysis modes, are a promising technology to enable long-duration energy storage either for grid leveling supporting greater adoption of intermittent renewable energy sources or for remote, off-grid applications. These approaches will require the development of new catalyst systems and approaches to integrate these catalysts into devices with materials and chemical environments dramatically different from hydrogen-fueled PEM fuel cells. While the most probable applications for these long-term fuel cell technologies are still unknown, consideration of the possible relevant systems-level constraints can help guide their strategic advancement toward useful applications.

1.4 Note

The views and opinions of the authors expressed herein do not necessarily state or reflect those of the United States Government or any agency thereof. Neither the United States Government nor any agency thereof, nor any of their employees, makes any warranty, expressed or implied, or assumes any legal liability or responsibility for the accuracy, completeness, or usefulness of any information, apparatus, product, or process disclosed, or represents that its use would not infringe privately owned rights.

Acronyms

AST	accelerated stress test
BOP	balance of plant
CHP	combined heat and power
DOE	U.S. Department of Energy
HDV	heavy-duty vehicle
HOR	hydrogen oxidation reaction
MEA	membrane electrode assembly
ORR	oxygen reduction reaction
PEM	polymer electrolyte membrane
PGM	platinum group metal
R&D	research and development
RD&D	research, development, and demonstration
U.S. DRIVE	Driving Research and Innovation in Vehicle efficiency and Energy sustainability

Symbols

ΔT	difference temperature
A	surface area
H	heat transfer coefficient
P_g	gross power rating of the stack
Q	heat
T_a	ambient temperature
T_c	coolant temperature
V_i	ideal cell voltage
V_r	cell voltage

References

1 U.S. Department of Energy (2016). Hydrogen and fuel cell technologies office multi-year research, development, and demonstration plan, Section 3.4: Fuel cells. https://www.energy.gov/eere/fuelcells/downloads/hydrogen-and-fuel-cell-technologies-office-multi-year-research-development (accessed 16 June 2021).

2 Fuel Cells and Hydrogen Joint Undertaking (2020). State-of-the-art and future targets. https://www.fch.europa.eu/soa-and-targets (accessed 13 December 2020).

3 New Energy and Industrial Technology Development Organization (2018). NEDO's technology development roadmap for fuel cells and hydrogen. https://www.nedo.go.jp/english/news/AA5en_100334.html (accessed 13 December 2020).

4 Padgett, E. and Kleen, G. (2020). Automotive fuel cell targets and status. U.S. Department of Energy Hydrogen and Fuel Cell Technologies Program Record # 20005. https://www.hydrogen.energy.gov/pdfs/20005-automotive-fuel-cell-targets-status.pdf (accessed 16 June 2021).

5 Kleen, G. and Padgett, E. (2021). Durability-adjusted fuel cell system cost. U.S. Department of Energy Hydrogen and Fuel Cell Technologies Program Record #

21001. https://www.hydrogen.energy.gov/pdfs/21001-durability-adjusted-fcs-cost .pdf (accessed 16 June 2021).

6 James, B.D., Huya-Kouadio, J.M., Houchins, C., DeSantis, D.A. (2018). Mass production cost estimation of direct H_2 PEM fuel cell systems for transportation applications: 2018 update. Strategic Analysis Inc. https://www.energy.gov/sites/prod/files/2019/12/f70/fcto-sa-2018-transportation-fuel-cell-cost-analysis.pdf (accessed 16 June 2021).

7 Thompson, S.T., James, B.D., Huya-Kouadio, J.M. et al. (2018). Direct hydrogen fuel cell electric vehicle cost analysis: system and high-volume manufacturing description, validation, and outlook. *Journal of Power Sources* 399: 304–313. https://doi.org/10.1016/j.jpowsour.2018.07.100.

8 James, B.D. (2020). Fuel cell systems analysis. *U.S. DOE Hydrogen and Fuel Cells Program 2020 Annual Merit Review and Peer Evaluation Meeting*, Washington, D.C. (19–21 May 2020). https://www.hydrogen.energy.gov/pdfs/review20/fc163_james_2020_o.pdf (accessed 16 June 2021).

9 Ahluwalia, R.K., Wang, X., Peng, J.-K., and Papadias, D. (2020). Fuel cell system optimization for rail and maritime applications. *U.S. DOE Hydrogen and Fuel Cells Program 2020 Annual Merit Review and Peer Evaluation Meeting,* Washington, D.C. (19–21 May 2020). https://www.hydrogen.energy.gov/pdfs/review20/fc329_ahluwalia_2020_p.pdf (accessed 16 June 2021).

10 Ahluwalia, R.K., Wang, X., and Peng, J.-K. (2020). Fuel cell system modeling and analysis. *U.S. DOE Hydrogen and Fuel Cells Program 2020 Annual Merit Review and Peer Evaluation Meeting*, Washington, D.C. (19–21 May 2020). https://www.hydrogen.energy.gov/pdfs/review20/fc017_ahluwalia_2020_o.pdf (accessed 16 June 2021).

11 Battelle Memorial Institute (2016). Manufacturing cost analysis of 100 and 250 kW fuel cell systems for primary power and combined heat and power applications. https://www.energy.gov/sites/prod/files/2016/07/f33/fcto_battelle_mfg_cost_analysis_pp_chp_fc_systems.pdf (accessed 16 June 2021).

12 Battelle Memorial Institute (2016). Manufacturing cost analysis of PEM fuel cell systems for 5- and 10-kW backup power applications. https://www.energy.gov/sites/prod/files/2016/12/f34/fcto_cost_analysis_pem_fc_5-10kw_backup_power_0.pdf (accessed 16 June 2021).

13 James, B.D. and DeSantis, D.A. (2015). Manufacturing cost and installed price analysis of stationary fuel cell systems. Strategic Analysis Inc. https://www.sainc.com/assets/site_18/files/publications/sa%202015%20manufacturing%20cost%20and%20installed%20price%20of%20stationary%20fuel%20cell%20systems_rev3.pdf (accessed 16 June 2021).

14 Wei, M., Lipman, T., Mayyas, A., et al. (2014). A total cost of ownership model for low temperature PEM fuel cells in combined heat and power and backup power applications. Lawrence Berkeley National Laboratory. https://eta-publications.lbl.gov/sites/default/files/wei_-_a_total_cost_of_ownership_model_for_low_temp_pem_fuel_cells_-_final.pdf (accessed 16 June 2021).

15 O'Hayre, R., Cha, S.-W., Colella, W., and Prinz, F.B. (2016). *Fuel Cell Fundamentals*, 3e. Hoboken, NJ: Wiley.

16 Dicks, A.L. and Rand, D.A.J. (2018). *Fuel Cell Systems Explained*, 3e. Hoboken, NJ: Wiley.

17 Gasteiger, H.A., Kocha, S.S., Sompalli, B., and Wagner, F.T. (2005). Activity benchmarks and requirements for Pt, Pt-alloy, and non-Pt oxygen reduction catalysts for PEMFCs. *Applied Catalysis B: Environmental* 56: 9–35. https://doi.org/10.1016/j.apcatb.2004.06.021.

18 Kongkanand, A. and Mathias, M.F. (2016). The priority and challenge of high-power performance of low-platinum proton-exchange membrane fuel cells. *Journal of Physical Chemistry Letters* 7: 1127–1137. https://doi.org/10.1021/acs.jpclett.6b00216.

19 Ahluwalia, R.K., Wang, X., and Steinbach, A.J. (2016). Performance of advanced automotive fuel cell systems with heat rejection constraint. *Journal of Power Sources* 309: 178–191. https://doi.org/10.1016/j.jpowsour.2016.01.060.

20 USDRIVE (2017). Fuel cell technical team roadmap. https://www.energy.gov/sites/prod/files/2017/11/f46/FCTT_Roadmap_Nov_2017_FINAL.pdf (accessed 13 December 2020).

21 Reiser CA, Bregoli L, Patterson TW, Yi JS, Yang JD, Perry ML, Jarvi TD (2005) A reverse-current decay mechanism for fuel cells. *Electrochemical and Solid-State Letters* 8:A273. https://doi.org/10.1149/1.1896466.

22 Perry, M.L., Patterson, T., and Reiser, C. (2019). Systems strategies to mitigate carbon corrosion in fuel cells. *ECS Transactions* 3: 783–795. https://doi.org/10.1149/1.2356198.

23 Borup, R., Meyers, J., Pivovar, B. et al. (2007). Scientific aspects of polymer electrolyte fuel cell durability and degradation. *Chemical Reviews* 107: 3904–3951. https://doi.org/10.1021/cr050182l.

24 Patterson, T.W. and Darling, R.M. (2006). Damage to the cathode catalyst of a PEM fuel cell caused by localized fuel starvation. *Electrochemical and Solid-State Letters* 9: A183. https://doi.org/10.1149/1.2167930.

25 Sutharssan, T., Montalvao, D., Chen, Y.-K. et al. (2017). A review on prognostics and health monitoring of proton exchange membrane fuel cell. *Renewable and Sustainable Energy Reviews* 75: 440–450. https://doi.org/10.1016/j.rser.2016.11.009.

26 Marcinkoski, J. (2019). Hydrogen class 8 long haul truck targets. U.S. Department of Energy Hydrogen and Fuel Cell Technologies Program Record # 19006. https://www.hydrogen.energy.gov/pdfs/19006_hydrogen_class8_long_haul_truck_targets.pdf (accessed 16 June 2021).

27 Ahluwalia, R.K., Wang, X., Peng, J.-K. et al. (2021). Achieving 5,000-h and 8,000-h low-PGM electrode durability on automotive drive cycles. *Journal of the Electrochemical Society* 168: 044518. https://doi.org/10.1149/1945-7111/abf507.

28 Ramsden, T. (2013). An evaluation of the total cost of ownership of fuel cell powered material handling equipment. National Renewable Energy Laboratory. https://www.nrel.gov/docs/fy13osti/56408.pdf (accessed 21 June 2021).

29 Thompson ST, Wilson AR, Zelenay P, Myers DJ, More KL, Neyerlin KC, Papageorgopoulos D (2018) ElectroCat: DOE's approach to PGM-free catalyst and electrode R&D. *Solid State Ionics* 319:68–76. https://doi.org/10.1016/j.ssi.2018.01.030.